EclProfile CT+ Jr NEW

ORDER CODE: ECLCTPLUSJRBK



SOURCE	ZOOM RANGE	IP RATING
200W 6 colour LEDs source	21°-50° manual (field angle 24°-56°)	IP20

WEIGHT	LUMINOUS FLUX (MAX)	CRI
5,0kg / 11.02lbs	5'256 lm	95,2 @3'200K

Downloaded on 28/11/2026 - data may be provisional: features, specifications and appearance are subject to change without notice

TECHNICAL SPECIFICATIONS

LIGHT SOURCE

Source:	200W 6 colour LEDs source
Luminous flux:	(21°) 3'667 lm; (med) 5'256 lm; (50°) 5'046 lm @3.200 K
Lux:	(21°) 1'623 lx; (med) 730 lx; (50°) 401lx @5 m 3.200 K
CRI:	95,2 @3'200K; 93,8 @5'600K
R9:	96,1 @3'200K; 97,8 @5'600K
TLCI:	87 @3'200K; 90 @5'600K
TM30 Rf:	90,7 @3'200K; 88 @5'600K
TM30 Rg:	104 @3'200K; 102,1 @5'600K
Source life expectancy:	> 50.000 hrs (L70B10 @Ta 25° C / 77° F)

OPTICS

Zoom range:	21°-50° manual (field angle 24°-56°)
Lens type:	high-quality glass lens optics
Focus:	manual
Other:	see available accessories

COLOUR SYSTEM

Spektra OS:	unmatched color precision and consistency
Colour control:	XY, CCT, RGB, RAW, Gel with Source Emulation, Tungsten emulation, HSI, User preset
CCT:	linear CCT adjustment from 1.850 K-20.000K
Tungsten Emulation:	dimming with warm color shift simulation
Tint correction:	± green correction adjustment

DYNAMIC EFFECTS

Shutter system:	4 manual shutter blades
Iris:	5-100% , optional, manual
Special features:	allowed gobo and iris overlap

GOBOS

Gobo size:	(M size) 66 mm outer / 45 mm image / 1.1 mm thickness

CONTROL

Supported Protocols:	DMX512, RDM, CRMX (optional)
DMX channels:	from 1 channel to 25ch
RDM:	for remote addressing and parameter configuration
Display:	2.4'' Color display
Stand Alone:	1 push encoder
Master/Slave:	for synchronised operation of more units linked in a chain

ELECTRONICS

Dimmer:	linear 0 - 100% electronic dimmer
Dimmer curves:	5 selectable dimming modes available
Strobe / shutter:	1 - 30 Hz, electronic
Selectable PWM:	1,282 to 20,000 Hz (selectable steps)
Firmware upgrade with:	via DMX with UPBOXPRO (not included)

CONNECTIONS

Power connection:	Neutrik powerCON TRUE1 IN/OUT connectors
Signal connection:	Neutrik IP XLR 5p IN/OUT connectors
Wireless Connection:	optional LumenRadio TiMoTwo - CRMX, CRMX² (RX only) and W-DMX compatible

ELECTRICAL

Mains power supply:	100-240V - 50/60Hz
Max power consumption (230V):	235,7W
Output (at 230V):	14 units on a single power line
Standby power:	7 W
Power factor:	> 0,94

Downloaded on 28/11/2026 - data may be provisional: features, specifications and appearance are subject to change without notice

TECHNICAL SPECIFICATIONS

PHYSICAL

IP rating:	IP20
Cooling:	heat pipe with low-noise fan
Housing:	Sturdy die-cast magnesium body
Finish:	black (RAL 9004)
Operating temperature:	Ta -10 to +45 °C (+14 to +113 °F)
Dimensions (WxHxD):	228x236x516mm
Dimensions with PO system (WxHxD):	336x236x516mm
Weight:	5,0kg

INSTALLATION

Suspension and fixing:	bracket for hanging and floor positioning

CERTIFICATIONS / REPORTS

Compliance:	CE

BOX CONTENT

1 x ECLCTPLUSJR

1 x 1,5 meters power cable (BARE END - NEUTRIK POWERCON TRUE1 IP65)

ACCESSORIES & RELATED PRODUCTS



POET6POYOBK

Pole-operated yoke and zoom kit for the Poet F6 series

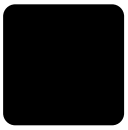

ECLPRJRPOYOMP

Metal adapter plates to fit POET6POYOBK yoke on ECLCTPLUSJR



ECLPRJRGH

Gobo holder for ECL Profile JR fixtures, M size



ECLPRJRIRIS

Iris accessory for ECL Profile JR fixtures



ECLPRJRFF

Filter frame for ECL Profile JR fixtures



LRT2WK2

Wireless kit 2 with TimoTwo



UPBOXPRO

Firmware uploader kit, USB IN, 5-pin XLR DMX OUT connector

TECHNICAL DRAWINGS

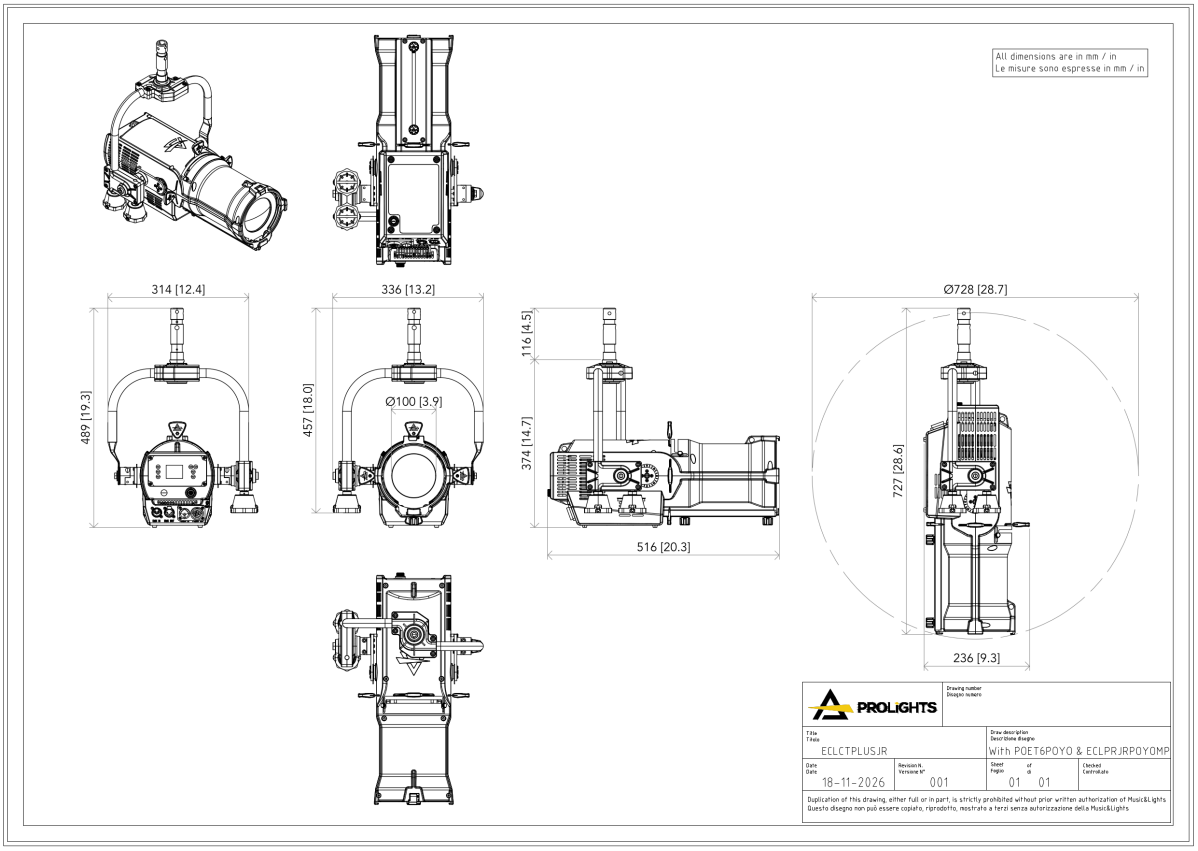

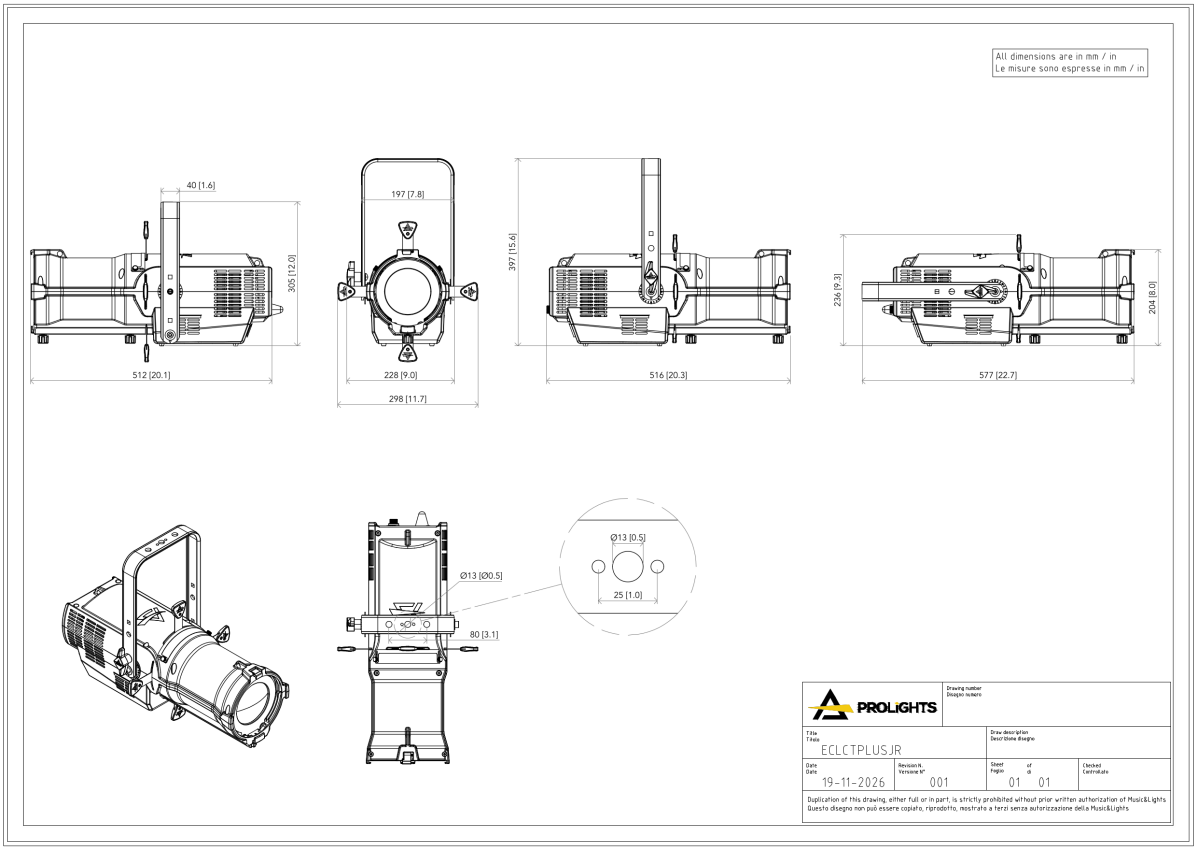

PHOTOMETRICS

Full On-RGB on-IRGB Mode Mode - Min Zoom

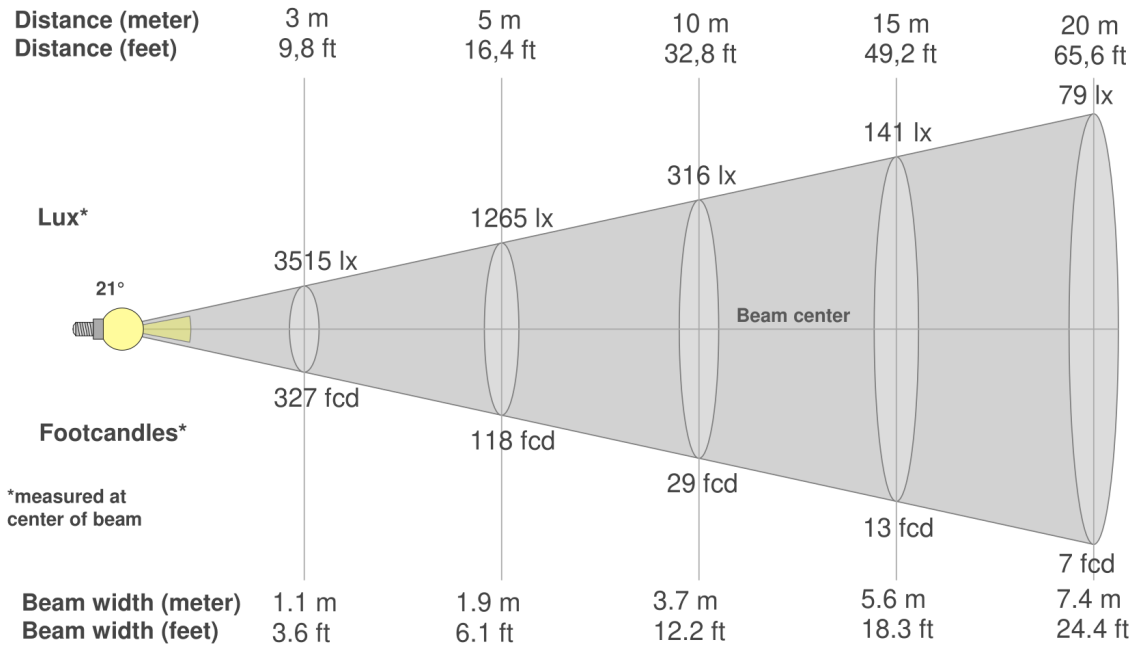

Beam angle (50%): **21°**	Field angle (10%): **23.9°**	Cut-off angle (2.5%): **24.7°**

Full On-RGB on-IRGB Mode Mode - Max Zoom

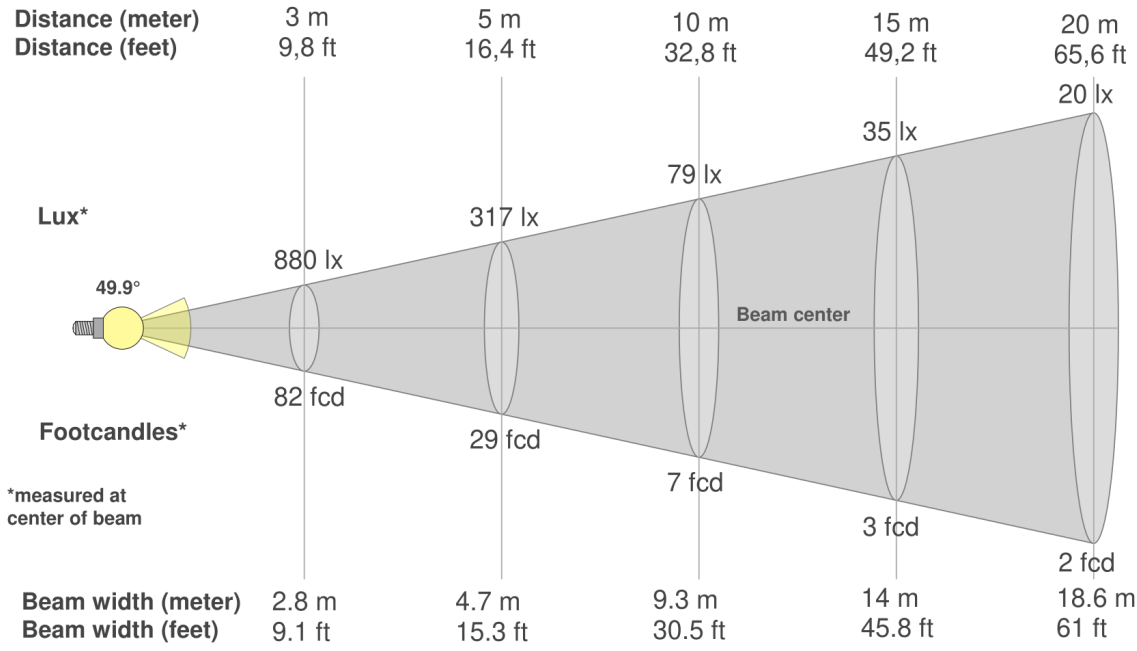

Beam angle (50%): **49.9°**	Field angle (10%): **56.2°**	Cut-off angle (2.5%): **57.1°**